PROJECT REFERENCE NO.	SHEET NO.
17BP.2.R.56	2
ROADWAY DESIGN ENGINEER	HYDRAULICS ENGINEER
3/30/2016	3/30/2016

C1	PROP. APPROX. 1½" ASPHALT CONCRETE SURFACE COURSE, TYPE SF9.5A, AT AN AVERAGE RATE OF 165 LBS. PER SQ.YD.
D1	PROP. APPROX. 3" ASPHALT CONCRETE INTERMEDIATE COURSE, TYPE I19.0B, AT AN AVERAGE RATE OF 342 LBS. PER SQ. YD.
E1	PROP. APPROX. 5" ASPHALT CONCRETE BASE COURSE, TYPE B25.0B, AT AN AVERAGE RATE OF 570 LBS. PER SQ. YD.
J	APPROX. 12" AGGREGATE BASE COURSE
T	EARTH MATERIAL.
U	EXISTING PAVEMENT.
V	FILTER FABRIC
Y	#57 WASHED STONE

NOTE: PAVEMENT EDGE SLOPES ARE 1:1 UNLESS SHOWN OTHERWISE.

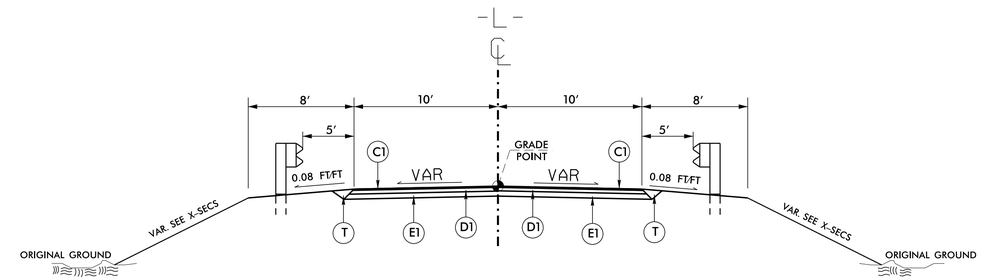

TYPICAL SECTION #2 (NTS)

-L- 14+00.00 - 15+50.00

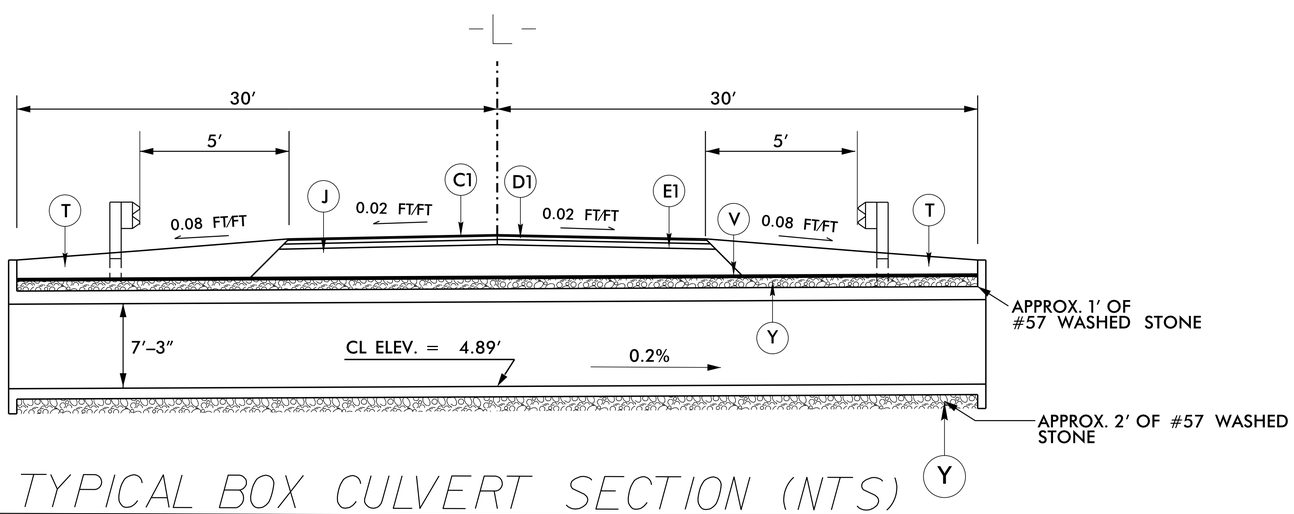

TYPICAL BOX CULVERT SECTION (NTS)

-L- STATION 14+76.00

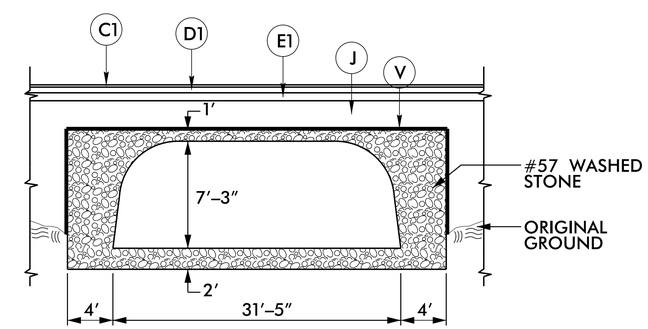

END VIEW BOX CULVERT (NTS)

-L- STATION 14+76.00

6/2/99

28-MAR-2016 11:57
C:\PROJECTS\CRAVEN\craven124\CRAVEN124_DDC2_PSH2_CUL.DGN
$$$$USERNAME$$$$